M5 Parts Identification (Standard Filter)

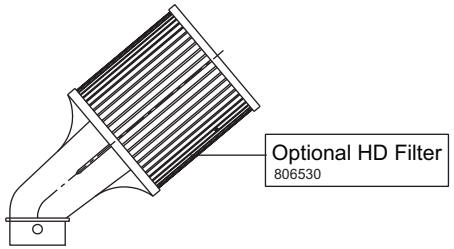

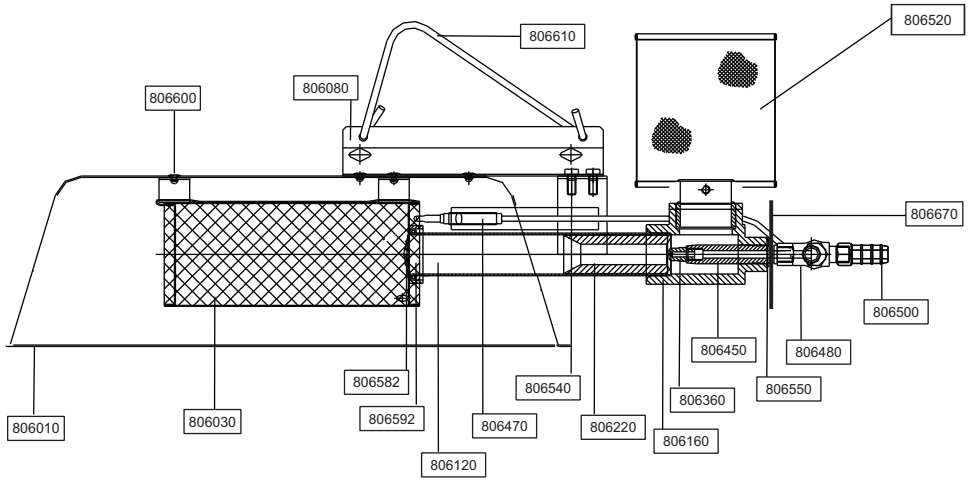

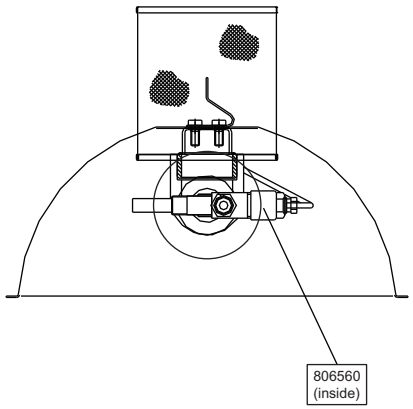

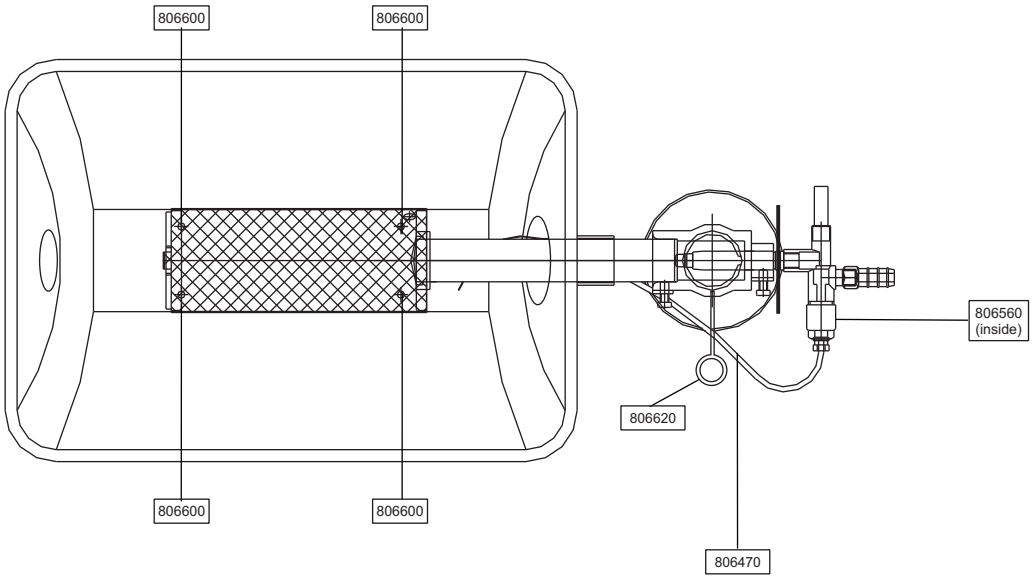

Part #	Qty.	Description		
806610	1	No. 40 Suspension Hook M5/M8		
806670	1	Heater ID Tag		
806600	8	No. 39 Rivet Stainless Steel		
806540	2	No. 36 Screw (M5x10)		
806520	1	No. 32 Dust Filter Standard	806530	(Heavy Duty Filter Available)
806500	1	No. 31 Hose Socket 3/8x1/8 (F)		
806480	1	No. 30 Safety Device w/Interior Coil		
806470	1	No. 29 Thermocouple M5/M8		
806450	1	No. 28 Jet Holder Long M5 LP	806445	No. 28 Jet Holder Short M5 NG
806360	1	No. 27 Jet M5 LP 0.52mm	806362	No. 27 Jet M5 NG 0.74mm
806220	1	No. 26 Venturi M5 LP 12mm	806222	No. 26 Venturi M5 NG 12mm
806160	1	No. 25 Tee-Piece M-Type		
806120	1	No. 24 Burner Pipe M5		
806582	1	No. 37 Burner Pipe Mesh M5 - (part of burner pipe)		
806592	1	No. 38 Burner Pipe Mesh Ring M5 - (part of burner pipe)		
806030	1	No. 22 Round Burner M5 w/Rivets		
806010	1	No. 21 Reflector M5/M8		
806080	1	No. 23 Suspension Frame M5/M8		
806550	1	No. 34 Spindle Ring		
806560	1	No. 35 Interior-Coil (located inside beneath cap)		
806620	1	No. 41 Thumb Screw - Filter		

Gasolec
AMERICA INC.